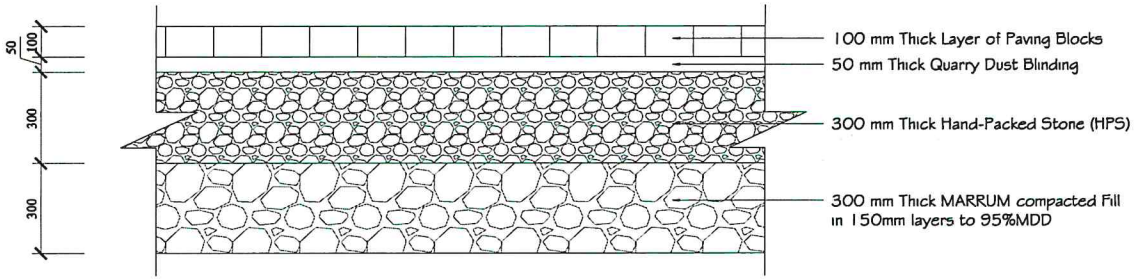

ROAD SECTION DETAIL

(Scale 1:25)

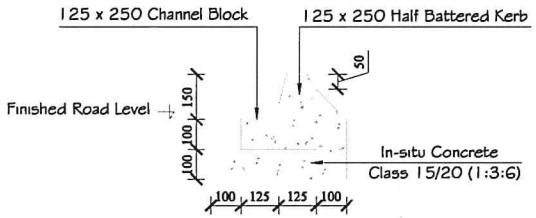

KERB AND CHANNEL

(Scale 1:25)

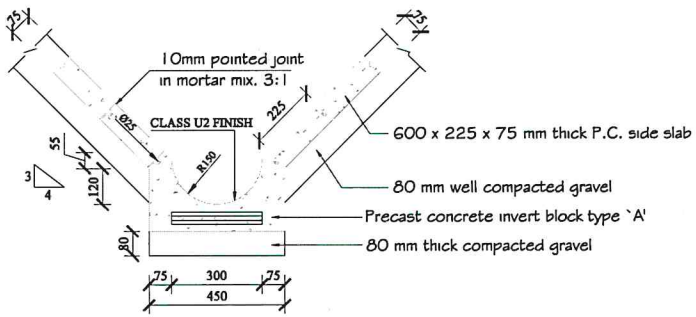

END ELEVATION

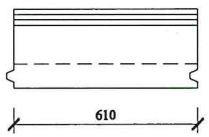

SIDE ELEVATION

INVERT BLOCK DRAIN TYPE 'A' ASSEMBLY DETAIL

(Scale 1:25)

	NAME	DATE	SIGN
APPROVED			
CHECKED ENGINEER, I/C	D.MWANIKI		
CHECKED HEAD D/MAN	B. Getho		
CHECKED H/SURVEYOR			
DRAWN	D.MWANIKI	27*OCT.2009	Kahare
SURVEYED			
TRACED			

REF	REVISION	DATE	SIGN	CHECKED	DATE

SCALE: 1:100

CIVIL WORKS DETAILS SUBSTATION

Kenya Power

K.P. & L. Co. LTD.

SK. No. 05821

SHEET 2A

12/02/2020

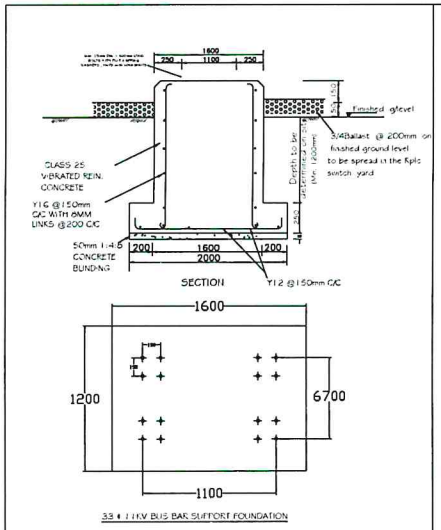

33 & 11KV BUS BAR SUPPORT FOUNDATION

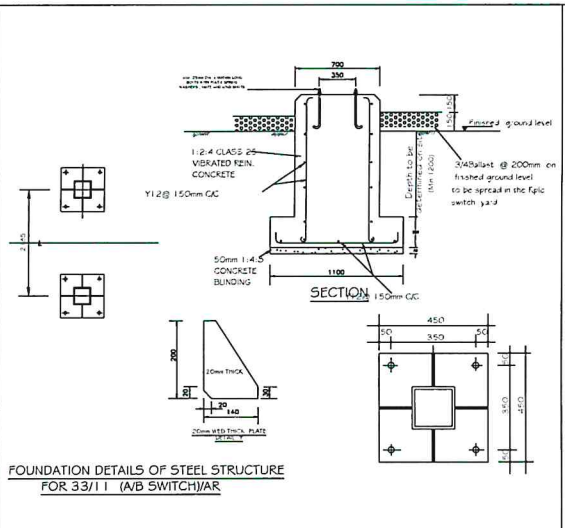

FOUNDATION DETAILS OF STEEL STRUCTURE FOR 33/11 (A/B SWITCH)/AR

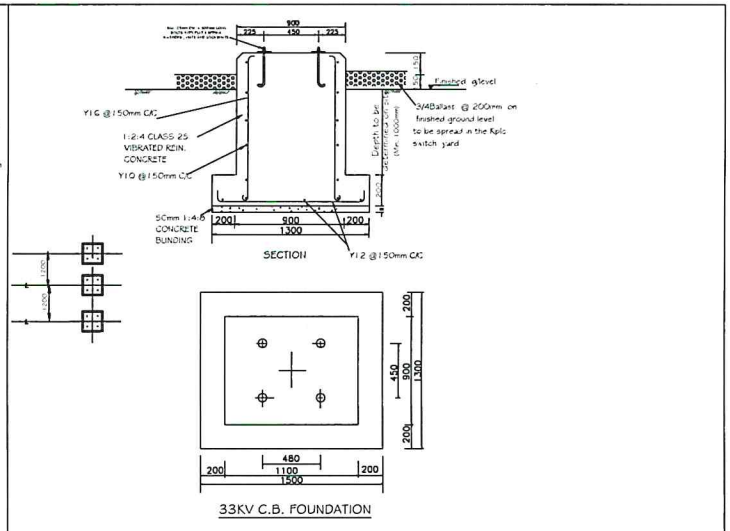

33KV C.B. FOUNDATION

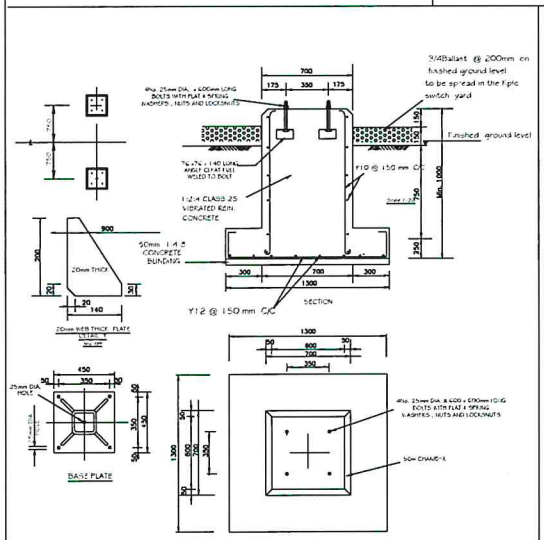

FOUNDATION PLAN CT/VTs & NCT

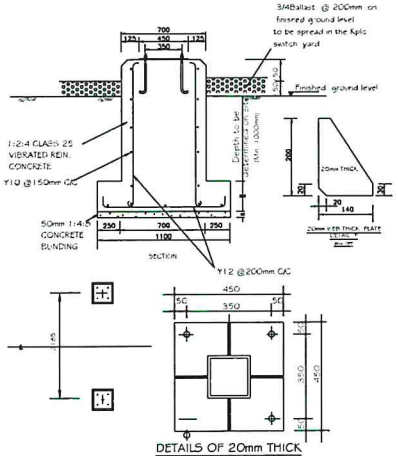

DETAILS OF 20mm THICK PLATE BASE

FOUNDATION DETAILS OF STEEL STRUCTURE FOR 33/11 KV P/INSULATOR /LOCAL TX H POLE/FEEDER TAKE OFF

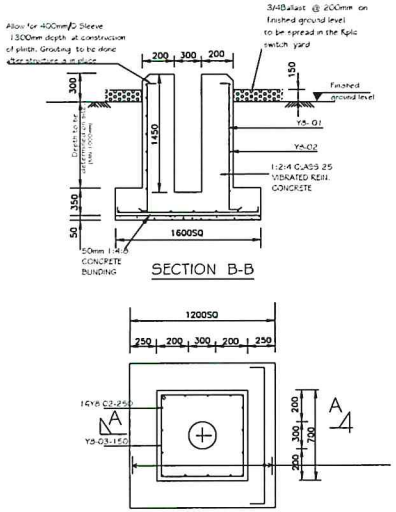

FND.DETAILS OF STEEL STRUCTURE FOR LIGHT MAST CH5

SEE SK No. 03774 SHT 01A

12/02/2020

	NAME	DATE	SIGN
APPROVED	G.NYAMBARE	Jan 2020	
CHECKED ENGINEER I/C	Eng. D.MWANIKI	Jan 2020	mwaniki
CHECKED PRINCIPAL D/MAN	L. OBARIO		
DRAWN	S.M Kimani	30/2/2019	Kimani
TRACED			

REF	REVISION	DATE	SIGN	CHECKED	DATE
1					
2					
3					
4					
5					
6					

FOUNDATION DETAILS FOR NEW BAMBURI 132 / 33 KV
CIVIL WORKS- 33kv plinths

Kenya Power

K. P.& L Co. Ltd.

SHEET 1

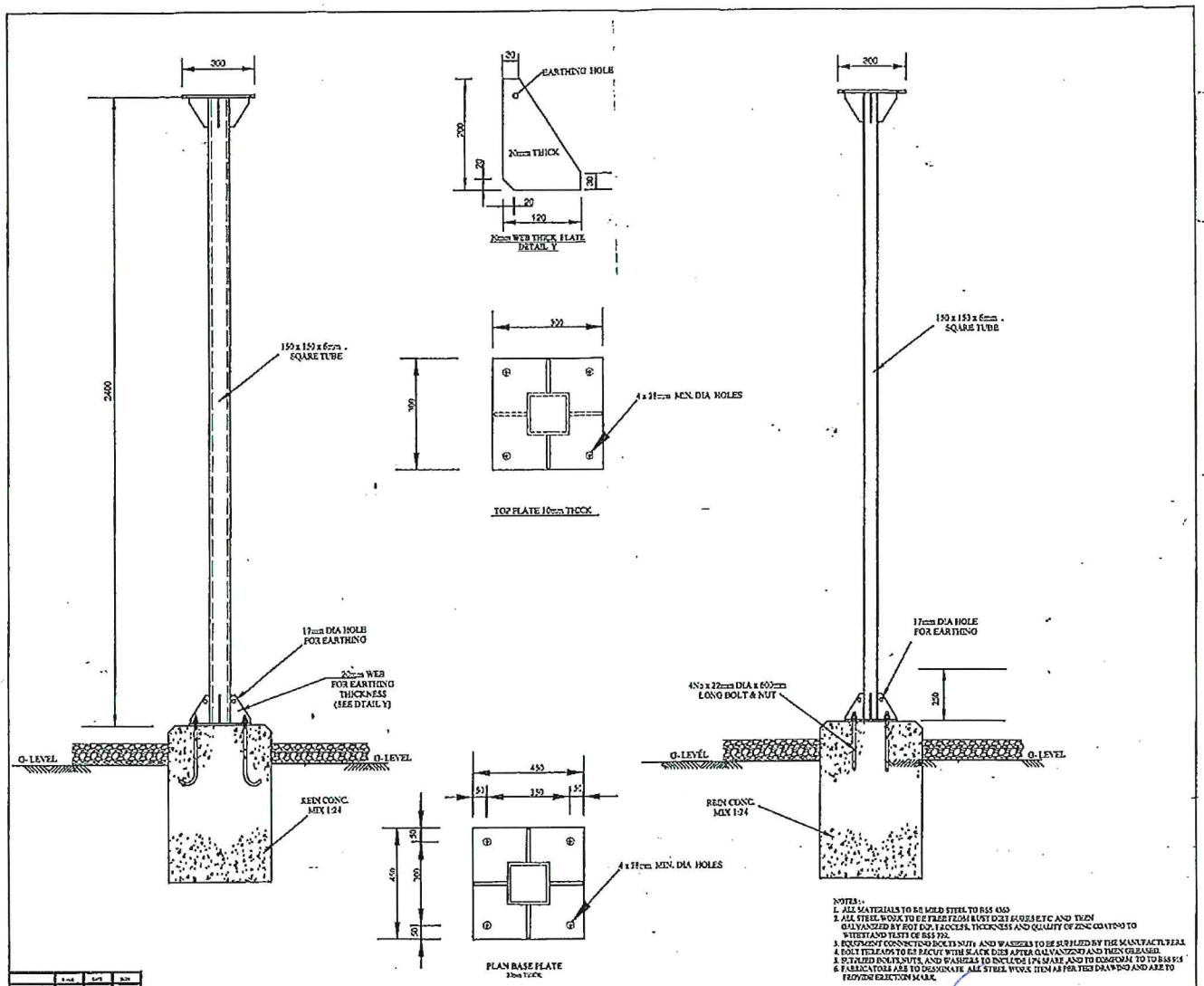
300
2400
150 x 150 x 6mm . SQARE TUBE
17mm DIA HOLE FOR EARTHING
20mm WEB FOR EARTHING THICKNESS (SEE DTAIL Y)
G-LEVEL
G-LEVEL
REIN CONC. MIX 1:2:4
EARTHING HOLE
20mm THICK
20mm WEB THICK PLATE DETAIL Y
300
4 x 18mm MIN. DIA HOLES
TOP PLATE 10mm THICK
300
150 x 150 x 6mm . SQARE TUBE
17mm DIA HOLE FOR EARTHING
4No x 22mm DIA x 600mm LONG BOLT & NUT
250
G-LEVEL
G-LEVEL
REIN CONC. MIX 1:2:4
450
350
4 x 18mm MIN. DIA HOLES
PLAN BASE PLATE 20mm THICK
NOTES:-
1. ALL MATERIALS TO BE MILD STEEL TO BSS 4360
2. ALL STEEL WORK TO BE FREE FROM RUST DIRT SLAGS ETC AND THEN GALVANIZED BY HOT DIP. PROCESS. THICKNESS AND QUALITY OF ZINC COATING TO WITHSTAND TESTS OF BSS 729.
3. EQUIPMENT CONNECTING BOLTS NUTS AND WASHERS TO BE SUPPLIED BY THE MANUFACTURERS.
4. BOLT THREADS TO BE RECUT WITH SLACK DIES AFTER GALVANIZING AND THEN GREASED.
5. SPECIALIZED BOLTS, NUTS, AND WASHERS TO INCLUDE 10% SPARE AND TO CONFORM TO TO BSS 915
6. FABRICATORS ARE TO DESIGNATE ALL STEEL WORK ITEM AS PER THE DRAWING AND ARE TO PROVIDE ERECTION MARK.
DETAILS OF 132KV S/Ds STRUCTURE AT KPC PUMPING STN.PS P24
K. P.& I. Co. Ltd.
SK. No. 09109

12/02/2020

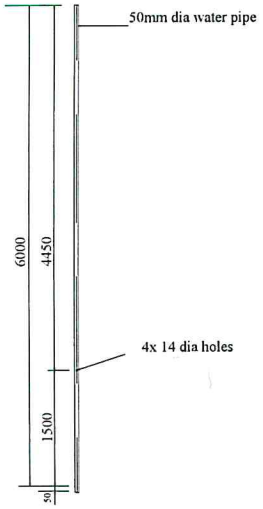

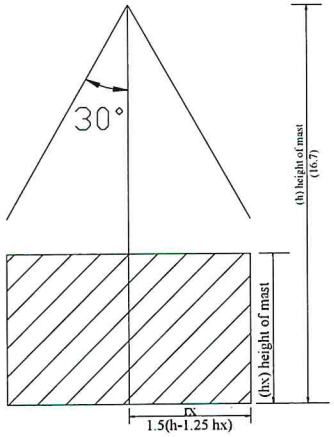

RADIUS OF COVERAGE

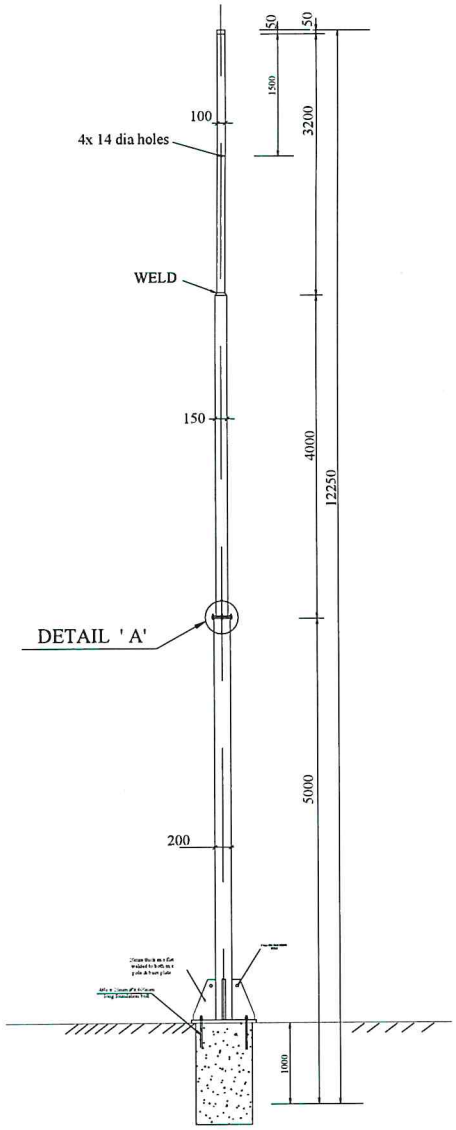

DETAILS OF 16.7m HIGH LIGHTING MAST

SCALE 1:50

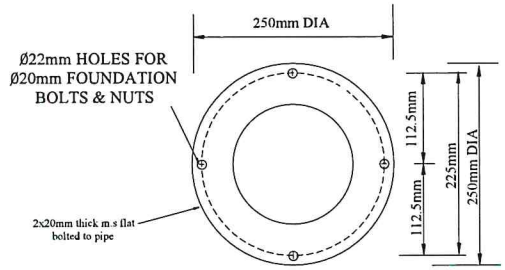

DETAILS ' A'

12/02/2022

NOTE

25x 3mm coper strip to be connected to the holes of indicated items and buried on theground accordingly

12mm bolt & washer to be used on the indicated holes

50mm dia. water pipe class 'b'

ALL DIMENSIONS ARE IMM

SHEET 9/A

	DATE	NAME	SIGN
APPROVED			
CHECKED ENGINEER I/C			
CHECKED PRINCIPAL D'MAN		B.Gatho	
DRAWN	21/07/2009	S.M.Kamwai	
TRACED			

REF	REVISION	DATE	SIGN	CHECKED	DATE
1					
2					
3					
4					
5					
6					

DETAILS OF LIGHTNING MAST AND STEEL SECURITY LIGHTING

K. P. &. L. Co. Ltd

SK. No. 09774

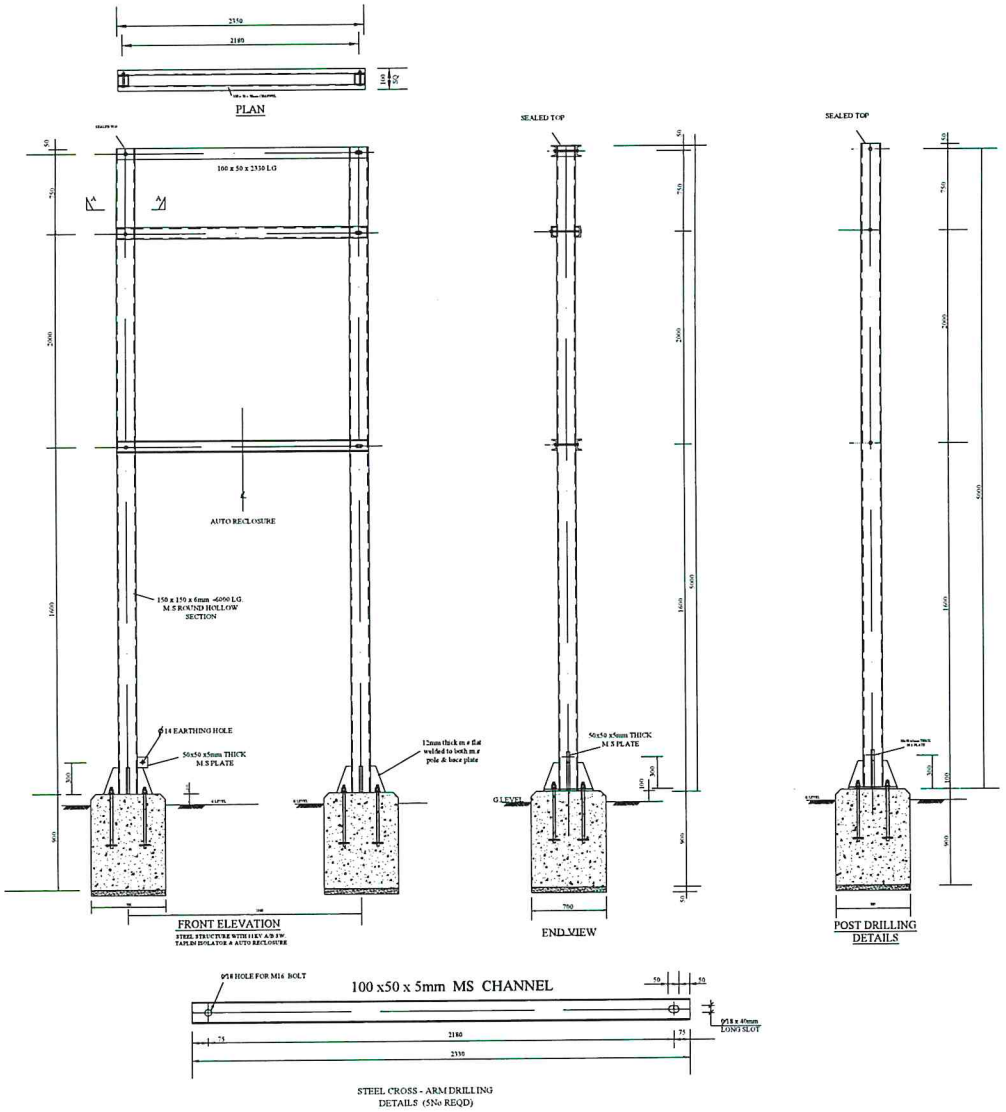

STEEL STRUCTURE WITH 11KV A/B SW.
TAPLIN ISOLATOR & AUTO RECLOSURE

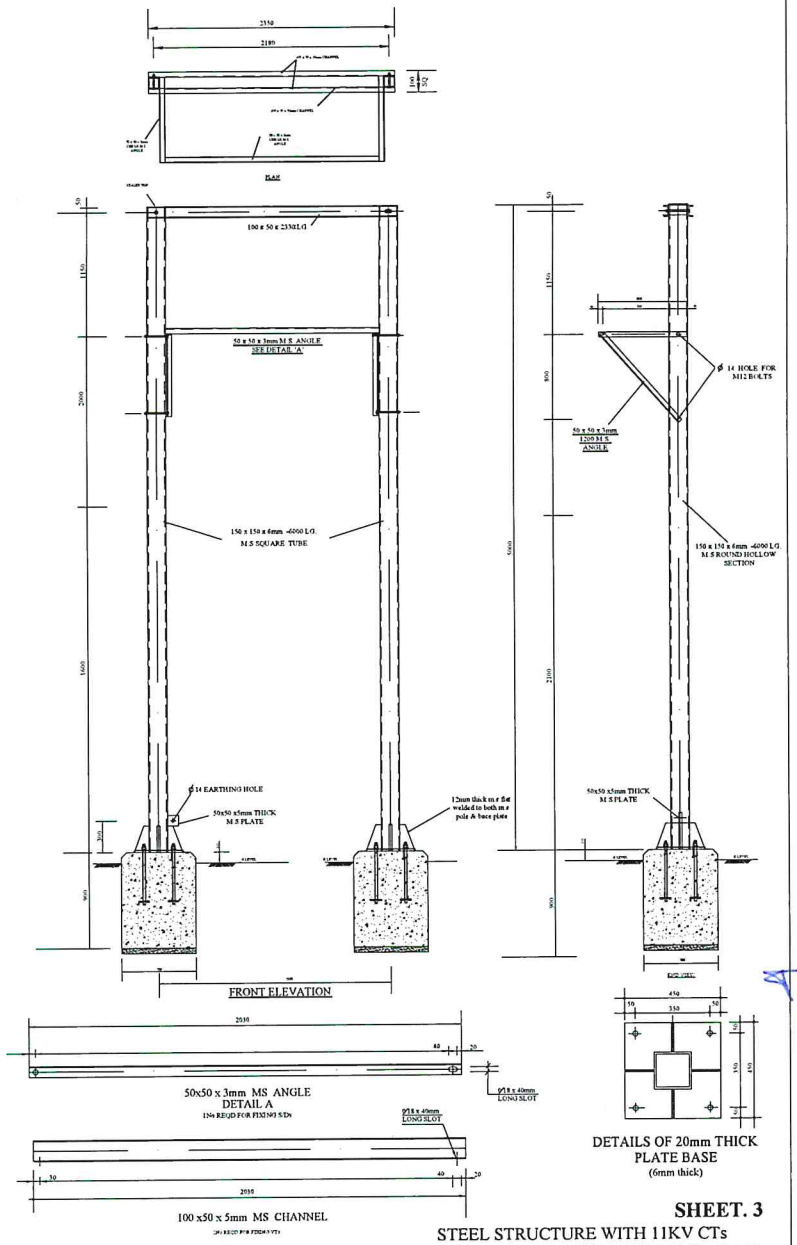

12/02/2020

SHEET. 3

STEEL STRUCTURE WITH 11KV CTs
& S/Ds OR 33/11KV POST INSULATOR & VTs

	DATE	NAME	SIGN
APPROVED			
CHECKED ENGINEER I/C			
CHECKED PRINCIPAL D'MAN		B.Gatho	
DRAWN	21/07/2009	S.M.Kimani	Kimani
TRACED			

REF	REVISION	DATE	SIGN	CHECKED	DATE
1					
2					
3					
4					
5					
6					

DETAILS OF STEEL 'H' POLE STRUCTURES WITH A/B SW, T/ISOLATOR & AUTO RECLOSURE AND CTs + S/Ds OR POST INSULATOR + VTs (33/11)

SCALE 1:20

K. P. & L. Co. Ltd

SK. No.09769

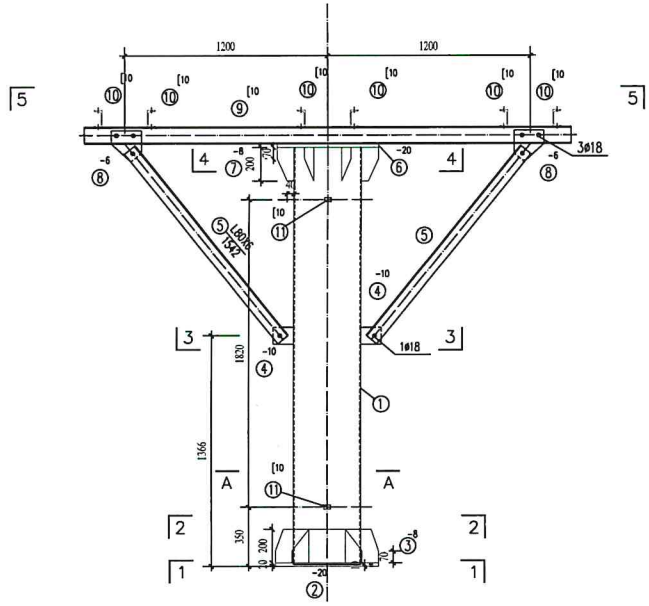

Section 1:20

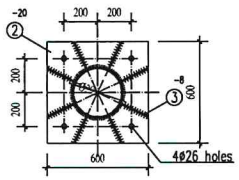

1 – 1 1:20

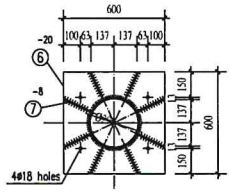

4 – 4 1:20

2 – 2 1:20

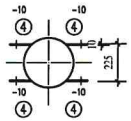

3 – 3 1:20

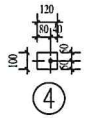

④

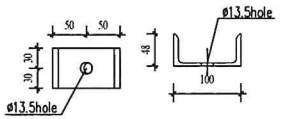

⑪ Detail of Earthing hole

(After grounding flat steel fixed spot welding.)

MEMBER LIST						
NO.	SIZE	LENG. (mm)	QTY	WGT (KG) SING	WGT (KG) SUB	NOTE
1	ø299x8	2470	1	141.81	141.8	
2	-20X600	600	1	65.28	65.3	
3	-8X180	180	8	2.15	17.2	
4	-10X100	120	4	1.03	4.1	
5	L80X6	1542	4	7.38	45.52	
6	-20X600	600	1	62.17	62.2	
7	-8X180	200	8	1.58	12.6	
8	-8X177	187	4	2.29	9.2	
9	[10	2800	2	28	56	
10	[10	348	3	3.48	10.44	
10*	[10	5240	3	52.40	157.20	
11	[10	60	2	0.6	1.2	
TOTAL					582.76 kg	

NOTE:

1. Blinding Concrete Grade: C15,
   Other Concrete Grade: C25 with 20mm aggregate,
   Secondary grouting Concrete Grade: C30,
   Min Cober to Reinforcement unless Specified otherwise: 40mm.
2. Steel materials: Q235B, Welding rod: E43.
3. The material should be assembled and welded after blanked, all welds shall be enclosed , the welding height shall be 8mm or 1.2times of thinner weldment.
4. All steel member parts shall be hot-dip galvanized as per DIN BS 5950 (Thickness not less than 86um).
5. All bolts, nuts, washers shall be hot-dip galvanized as per DIN BS 5950 (Thickness not less than 50um for M20 above &45um for M10 above).

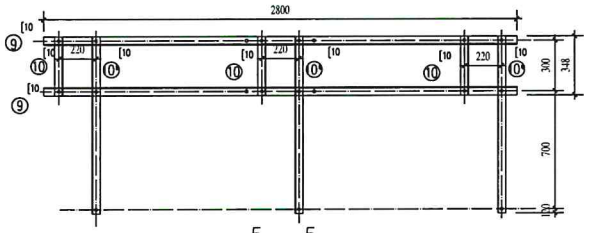

5 – 5 1:20

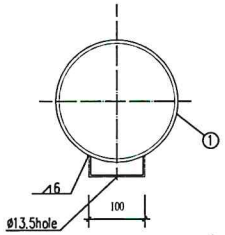

A–A

Cover:
Bot: 75mm
Sides: 50mm
Top: 50mm

12/02/2022

CLIENT: THE KENYA POWER AND LIGHTING COMPANY LTD.				CONTRACTOR: CHINT ELECTRIC CO., LTD.	
CLIENT DWG NO.				CONTRACT NO.	KPLC1/ET/REACTIVEPOWER/1-2013
PROJECT: FOR THE DESIGN, MANUFACTURE, SUPPLY, CONSTRUCTION, INSTALLATION, TESTING AND COMMISSIONING OF REACTIVE POWER COMPENSATORS FOR WEST KENYA, COAST AND MT.KENYA				01 / 05-09-14 / Liu / Revised by Electrical data	
				REV. / DATE / BY / DESCRIPTION	
BY	NAME	DATE	SCALE	TITLE: The Installation diagram of Surge Arrester-Support Structure	
DESIGNED	Liu	05-09-14	UNIT mm		
CHECKED	Yu	07-09-14	PLOT A1,A2		
APPROVED	Zhang	10-09-14	SHEET L|Y|0|2	DWG NO. New Bamburi-DD-CL-DW-07	REV. A01

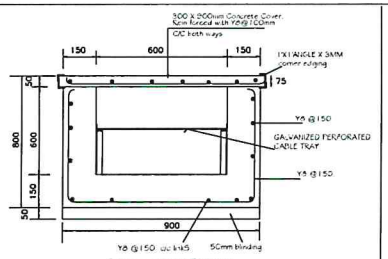

TYPICAL CABLE TRENCH

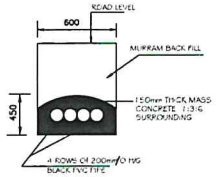

SECTION THRO' CABLE DUCTS

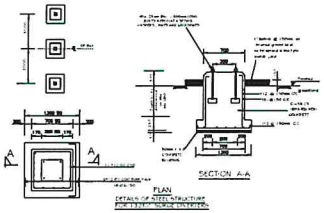

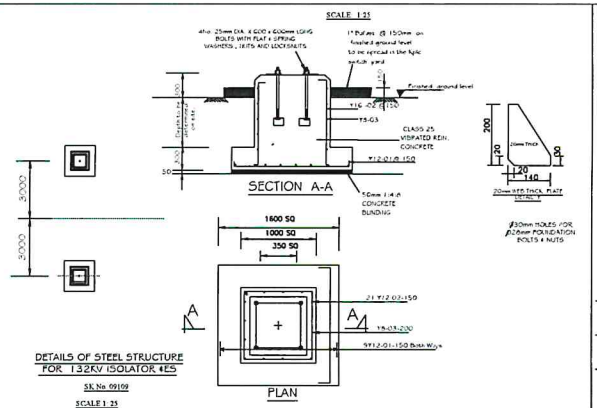

DETAILS OF STEEL STRUCTURE
FOR 132KV ISOLATOR 4ES

SK No 09109

SCALE 1:25

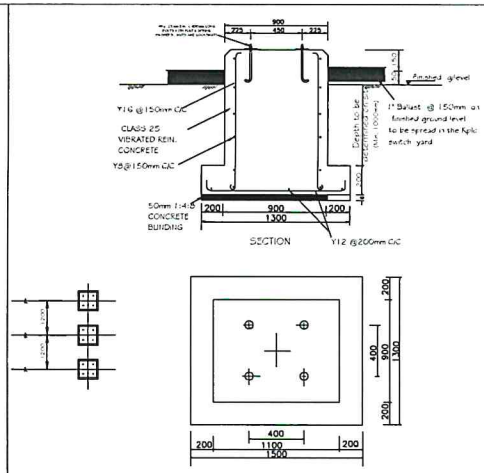

132KV C.B. FOUNDATION

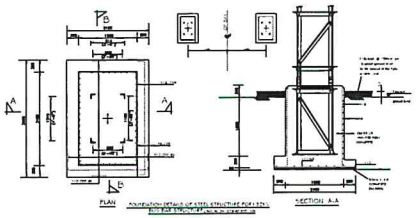

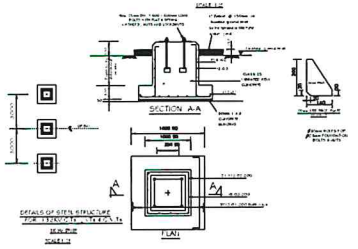

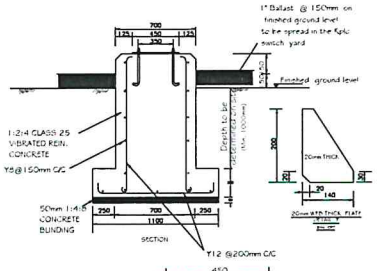

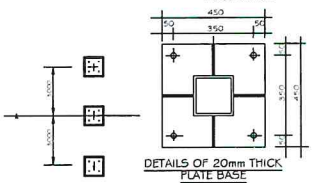

DETAILS OF 20mm THICK
PLATE BASE

FOUNDATION DETAILS OF STEEL
STRUCTURE FOR 132 KV P/INSULATOR

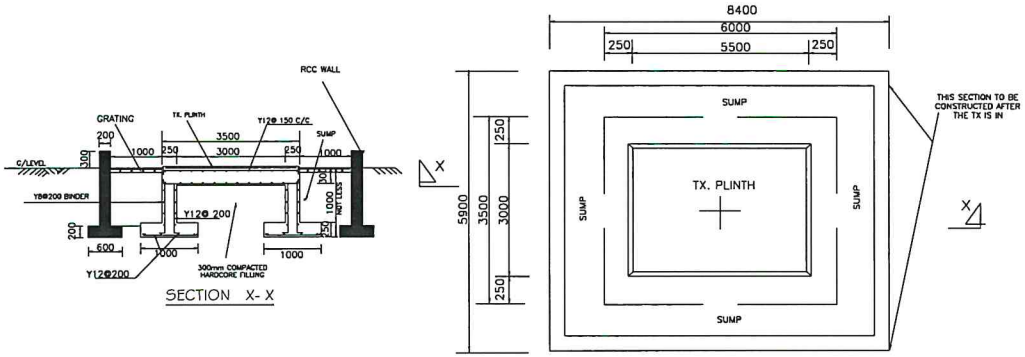

23MVA TX. PLINTH PLAN

12/02/2020

	NAME	DATE	SIGN
APPROVED	G.NYAMBARE	Jan 2020	
CHECKED ENGINEER VC	Eng. D.MWANIKI	Jan 2020	
CHECKED PRINCIPAL DMAN	L.OBAFO		
DRAWN	S.M Kimani	3/02/2010	Kimani
TRACED			

REF	REVISION	DATE	SIGN	CHECKED	DATE
1					
2					
3					
4					
5					
6					

CIVIL WORKS R.C.C DETAILS FOR NEW BAMBURI 132 /33 KV STATION
132 kv plinths

SHEET 2

K. P.& L Co. Ltd.

Kenya Power

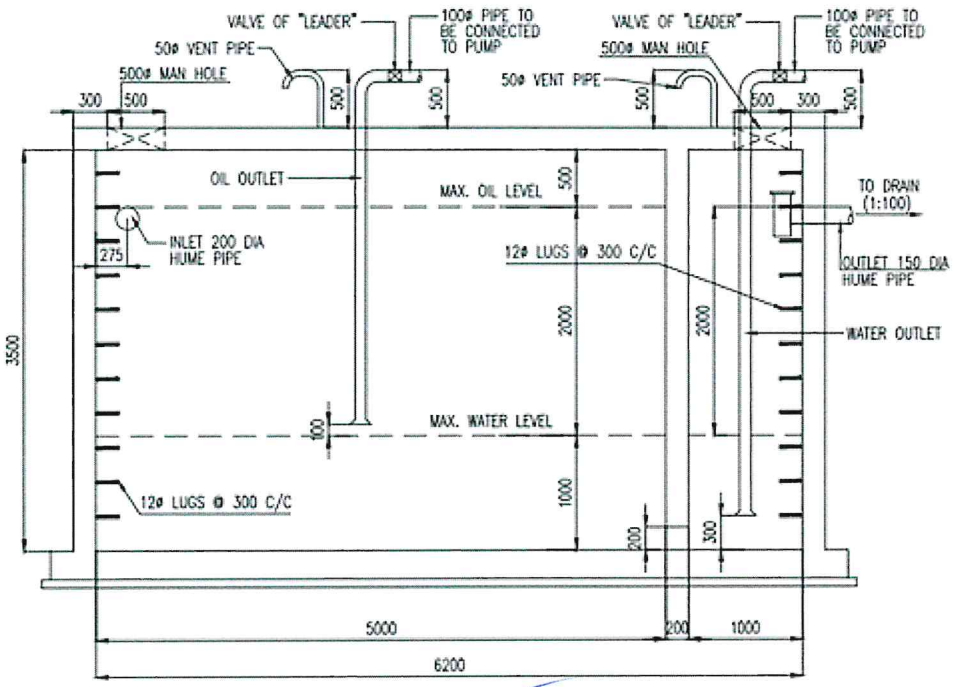
VALVE OF "LEADER"
100ø PIPE TO BE CONNECTED TO PUMP
50ø VENT PIPE
500ø MAN HOLE
300
500
500
500
VALVE OF "LEADER"
100ø PIPE TO BE CONNECTED TO PUMP
500ø MAN HOLE
50ø VENT PIPE
500
500
300
500
OIL OUTLET
MAX. OIL LEVEL
500
TO DRAIN (1:100)
INLET 200 DIA HUME PIPE
275
12ø LUGS @ 300 C/C
OUTLET 150 DIA HUME PIPE
2000
2000
WATER OUTLET
3500
100
MAX. WATER LEVEL
1000
12ø LUGS @ 300 C/C
200
300
5000
200
1000
6200

12/02/2022

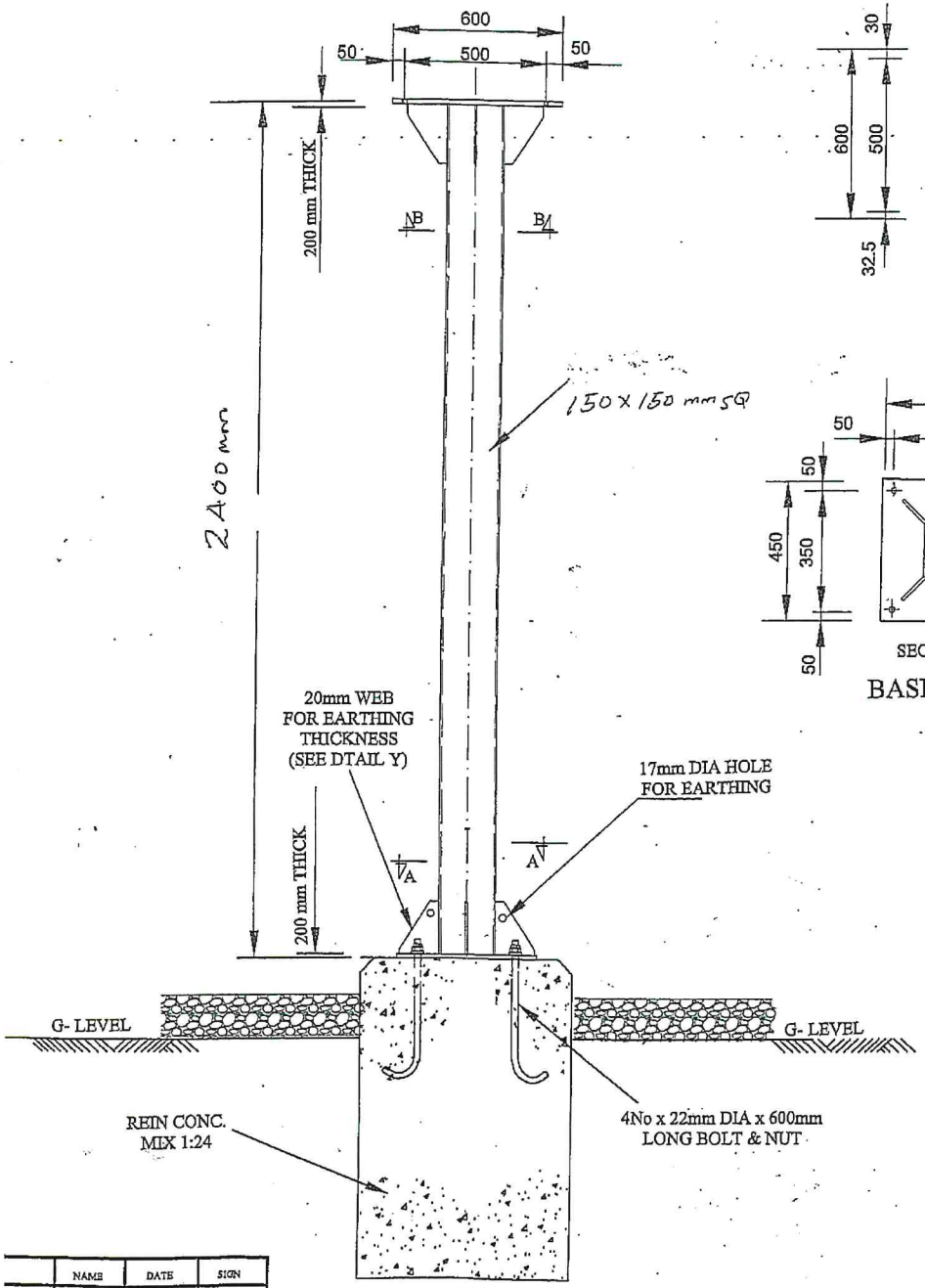

FRONT ELEVATION

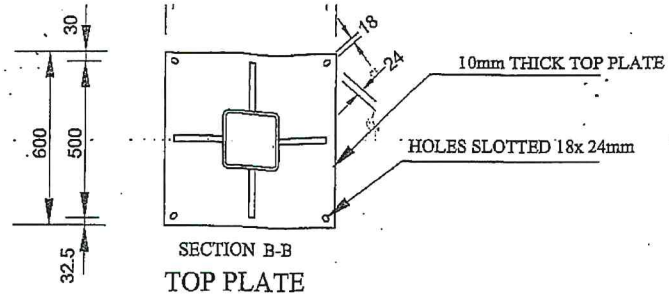

SECTION B-B

TOP PLATE

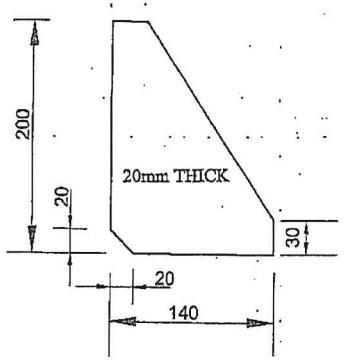

DETAIL 'Y'

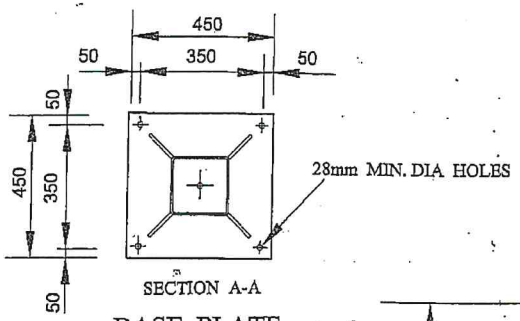

SECTION A-A

BASE PLATE

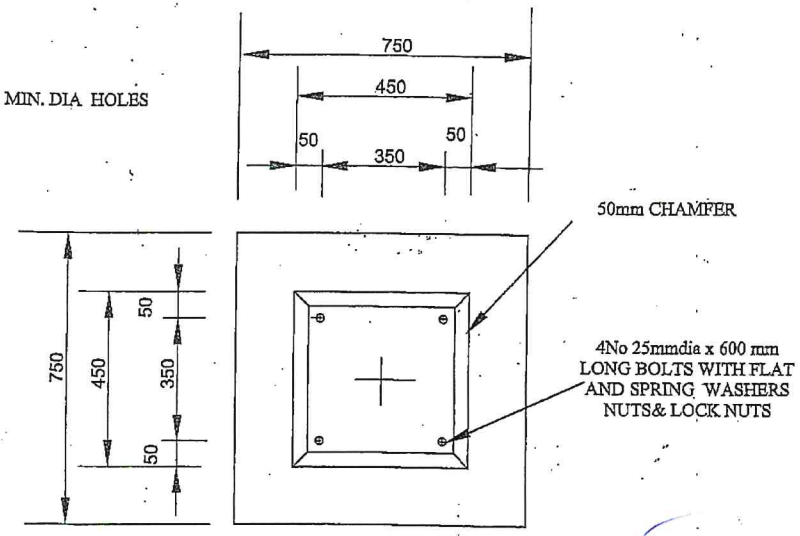

FOUNDATION PLAN

12/02/2020

NOTES :-

1. ALL MATERIALS TO BE MILD STEEL TO BSS 4360
2. ALL STEEL WORK TO BE FREE FROM RUST DIRT BURRS E.T.C AND THEN GALVANIZED BY HOT DIP. PROCESS, THICKNESS AND QUALITY OF ZINC COATING TO WITHSTAND TESTS OF BSS 729.
3. EQUIPMENT CONNECTING BOLTS NUTs AND WASHERS TO BE SUPPLIED BY THE MANUFACTURERS.
4. BOLT THREADS TO BE RECUT WITH SLACK DIES AFTER GALVANIZING AND THEN GREASED.
5. SUPPLIED BOLTS,NUTS, AND WASHERS TO INCLUDE 10% SPARE ,AND TO COMFORM TO TO BSS 916
6. FABRICATORS ARE TO DESIGNATE ALL STEEL WORK ITEM AS PER THIS DRAWING AND ARE TO PROVIDE ERECTION MARK.

	NAME	DATE	SIGN
ED			
UC			

REF	REVISION	DATE	SIGN	CHECKED	DATE

132 kV CTs, VTs & CVTs

Sk no 08409/A

SHEET 3A

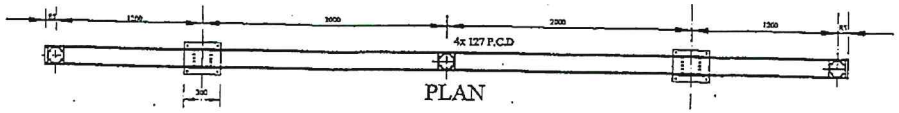

PLAN

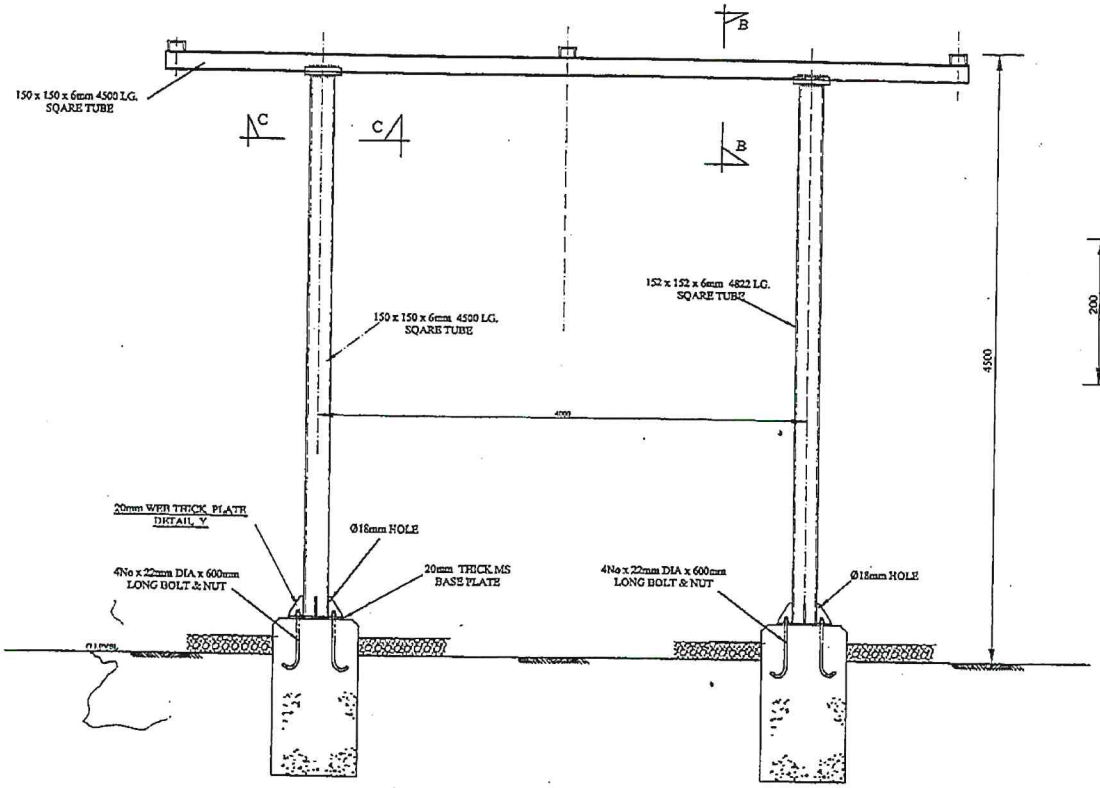

ELEVATION

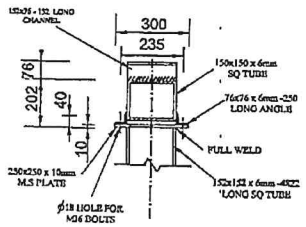

SECTION B-B

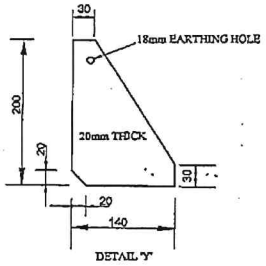

DETAIL 'Y'

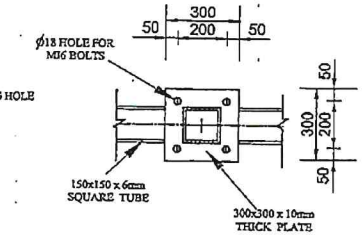

SECTION C-C

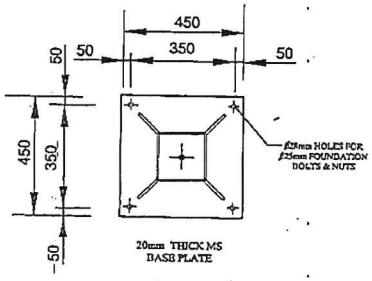

NOTES

1) ALL HOLES TO BE Ø18 FOR M16 BOLTS .UNLESS OTHERWISE STATED .
2) ALL STEELWORK TO BE FREE FROM RUST, RUST, DUST BURRS E.T.C THEN GALVANISED BY HOT DIP, PROCESS, THICKNESS AND QUALITY OF ZINC COATING TO WITHSTAND TEST OF 729.
3) ALL BOLTS& NUTS CONNECTING EQUIPMENT TO BE SUPPLIED BY EQUIPMENT MANUFACTUREERS.
4) BOLTS & NUTS TO CONFORM TO BSS 916 AND THE QUANTITY SUPPLIED TO INCLUDE 10% SPARE ALLOWANCE.
5). FABRICATORS ARE TO DESIGNATE ALL STEELWORK ITEMS AND PROVIDE ERECTION MARK PLANS.

12/02/2020

	NAME	DATE	SIGN
APPROVED			
CHECKED ENGINEER			
CHECKED PRINCIPAL ENGIN	B. Gachu		
DRAWN	B.M Kirwa	30/9/2010	

REF	REVISION	DATE	SIGN	CHECKED	DATE
1					
2					
3					
4					

SHEET 4C

DETAILS OF 132KV POST INSULATOR STRUUCTURE AT KPC PUMPING STN.PS P24

K. P.& L Co. Ltd.

A2

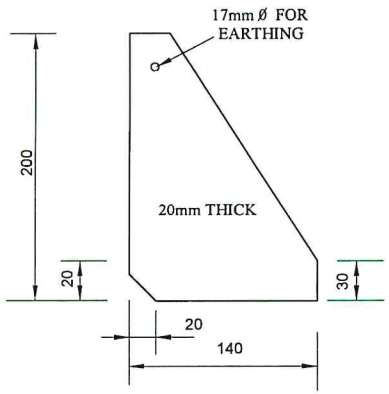

DETAIL Y

8No. OFF

SCALE 1:25

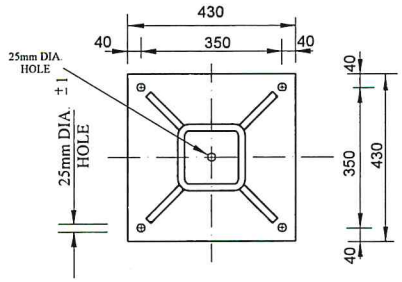

SECTION A-A

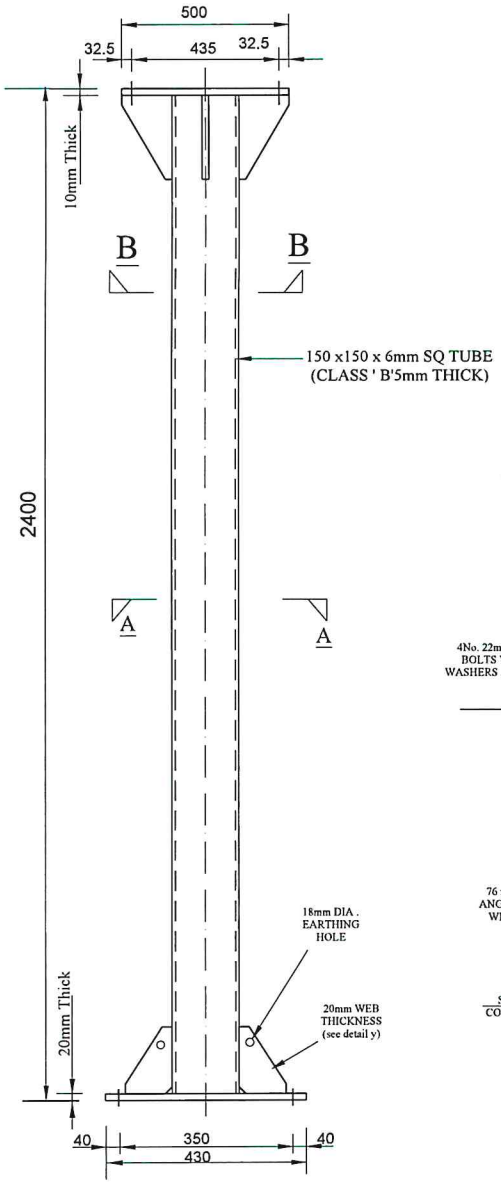

CTs ELEVATION

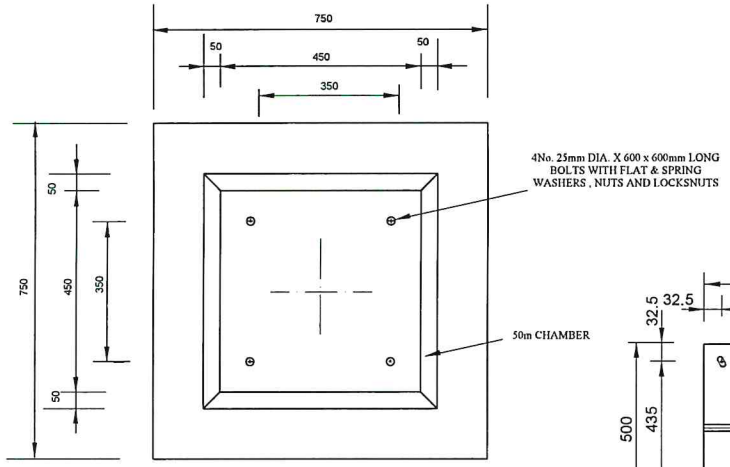

FOUNDATION PLAN

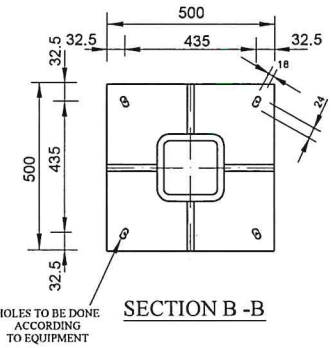

SECTION B -B

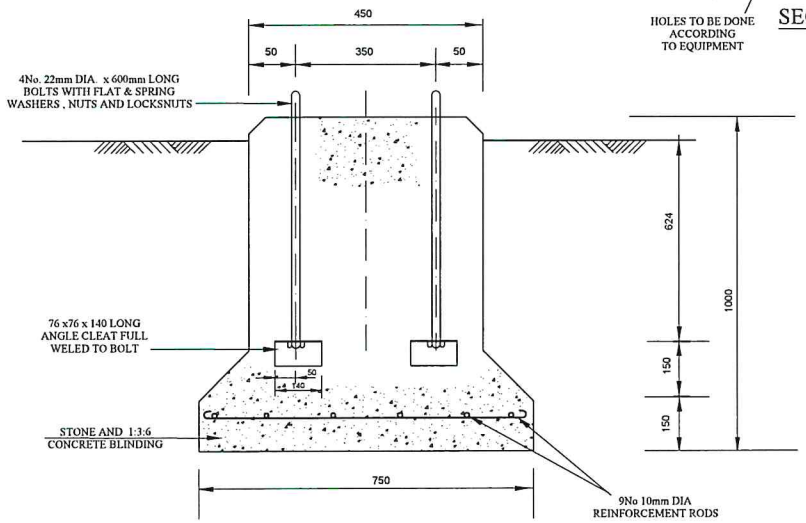

FOUNDATION PLAN

12/02/2020

SHEET 18

	DATE	NAME	SIGN
APPROVED			
CHECKED ENGINEER I/C			
CHECKED PRINCIPAL D'MAN		B.Gaitho	
DRAWN	21/07/2009	S.M.Kimani	Kimani
TRACED			

REF	REVISION	DATE	SIGN	CHECKED	DATE
1					
2					
3					
4					
5					
6					

DETAILS OF 33& 11KV CTs & VTs. STRUCTURE - STEEL

SCALE 1:10

K. P. &. L. Co. Ltd

SK. No.09774

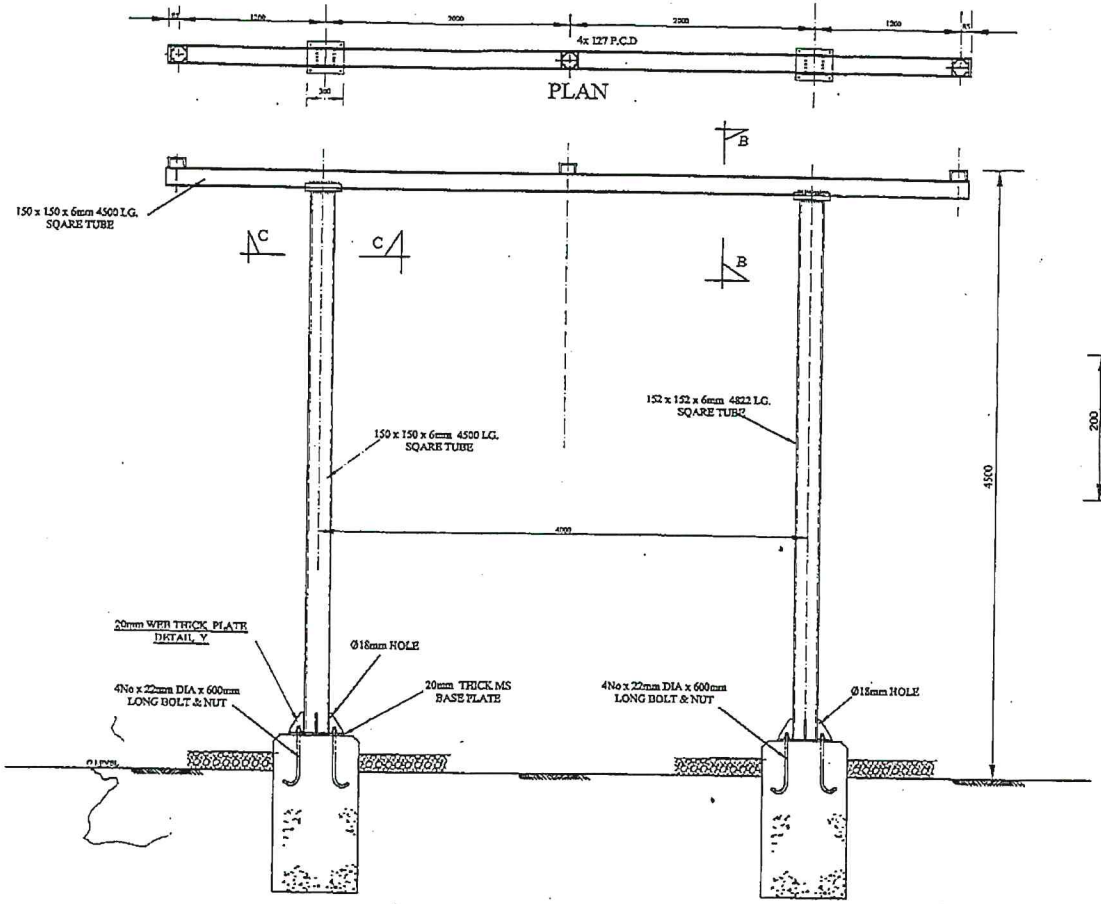

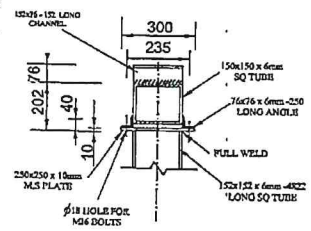

SECTION B-B

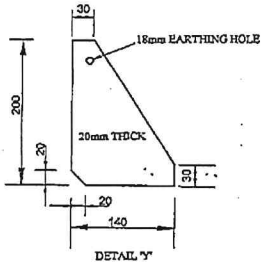

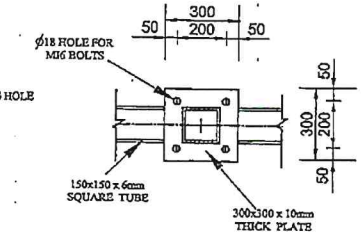

SECTION C-C

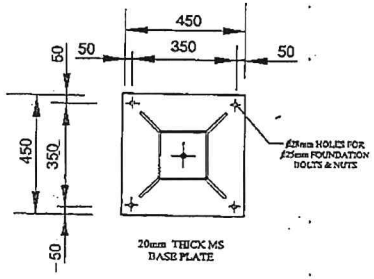

NOTES

1) ALL HOLES TO BE O18 FOR M16 BOLTS UNLESS OTHERWISE STATED.
2) ALL STEELWORK TO BE FREE FROM RUST, RUST, DUST BURRS E.T.C THEN GALVANISED BY HOT DIP. PROCESS, THICKNESS AND QUALITY OF ZINC COATING TO WITHSTAND TEST OF 729.
3) ALL BOLTS& NUTS CONNECTING EQUIPMENT TO BE SUPPLIED BY EQUIPMENT MANUFACTUREERS.
4) BOLTS & NUTS TO CONFORM TO BSS 916 AND THE QUANTITY SUPPLIED TO INCLUDE 10% SPARE ALLOWANCE.
5). FABRICATORS ARE TO DESIGNATE ALL STEELWORK ITEMS AND PROVIDE ERECTION MARK PLANS.

12/02/2020

	NAME	DATE	SIGN
APPROVED			
CHECKED ENGINEER			
CHECKED PRINCIPAL ENGIN	B. Gaube		
DRAWN	KM Kiruki	30/5/2010	

REF	REVISION	DATE	SIGN	CHECKED	DATE
1					
2					
3					
4					

DETAILS OF 132KV POST INSULATOR STRUUCTURE AT KPC PUMPING STN.PS P24

SHEET 4C

K. P.& L Co. Ltd.

A2

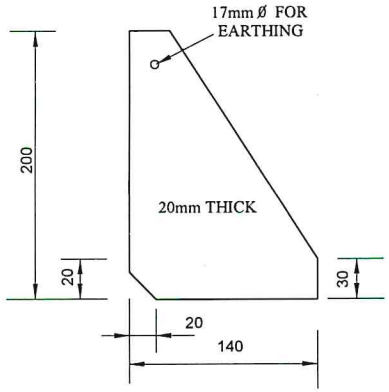

DETAIL Y
8No. OFF
SCALE 1:25

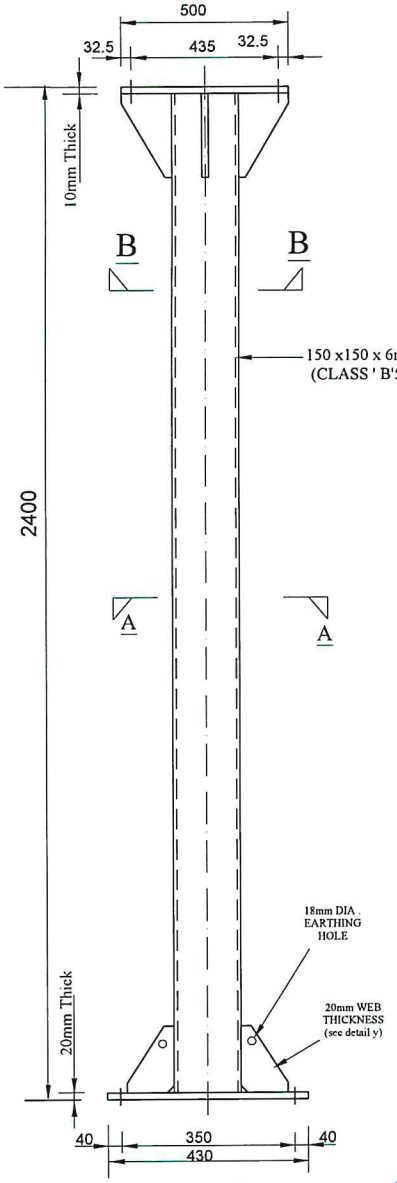

CTs ELEVATION

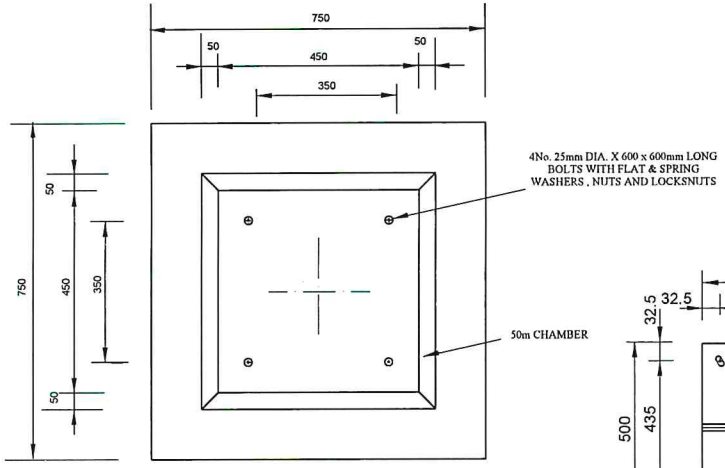

FOUNDATION PLAN

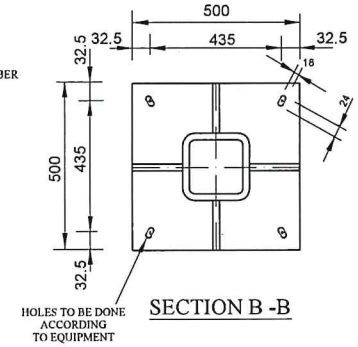

SECTION B -B

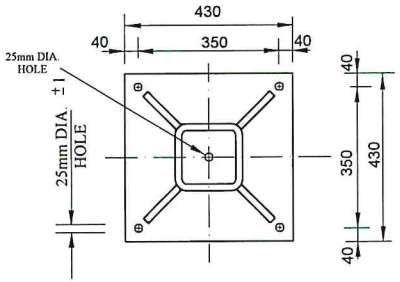

SECTION A-A

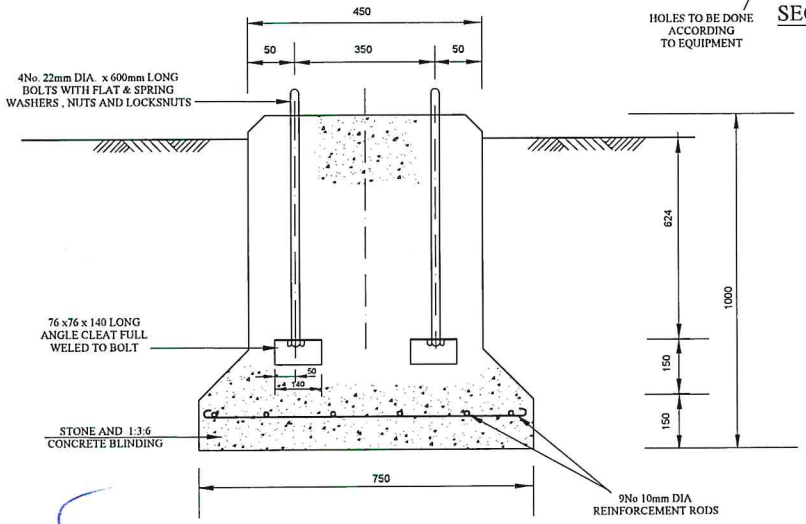

FOUNDATION PLAN

12/02/2020

SHEET 18

	DATE	NAME	SIGN
APPROVED			
CHECKED ENGINEER I/C			
CHECKED PRINCIPAL D'MAN		B.Gaitho	
DRAWN	21/07/2009	S.M.Kimani	Kimani
TRACED			

REF	REVISION	DATE	SIGN	CHECKED	DATE
1					
2					
3					
4					
5					
6					

DETAILS OF 33& 11KV CTs & VTs. STRUCTURE - STEEL

SCALE 1:10

K. P. &. L. Co Ltd

SK. No.09774

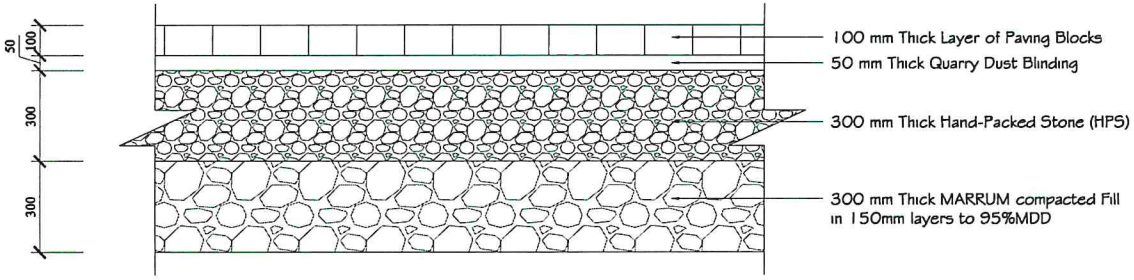

ROAD SECTION DETAIL

(Scale 1:25)

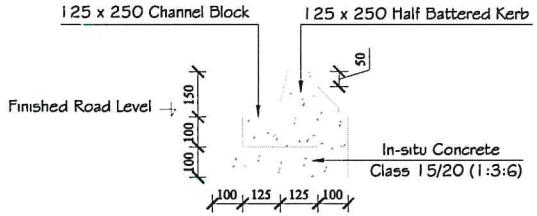

KERB AND CHANNEL

(Scale 1:25)

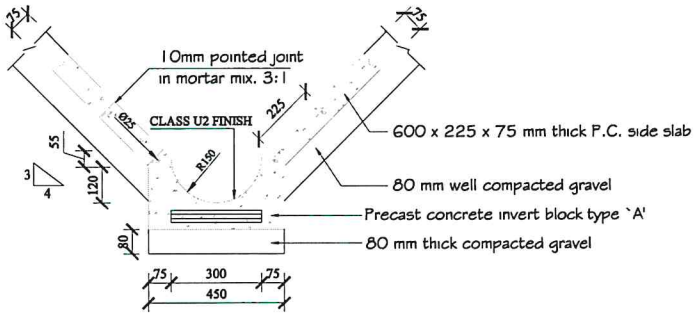

END ELEVATION

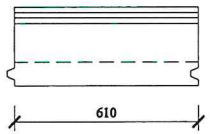

SIDE ELEVATION

INVERT BLOCK DRAIN TYPE 'A' ASSEMBLY DETAIL

(Scale 1:25)

	NAME	DATE	SIGN
APPROVED			
CHECKED ENGINEER I/C	D.MWANIKI		
CHECKED HEAD D'MAN	B. Gatho		
CHECKED HSURVEYOR			
DRAWN	D.MWANIKI	27 Oct 2005	Kahare
SURVEYED			
TRACED			

12/02/2020

REF	REVISION	DATE	SIGN	CHECKED	DATE

SCALE: 1:100

CIVIL WORKS DETAILS SUBSTATION

Kenya Power

SHEET 2A

K.P. & L. Co. LTD.

SK. No. 05821